HYDRAULIC BUFFER

TYPE 4

Static diagram

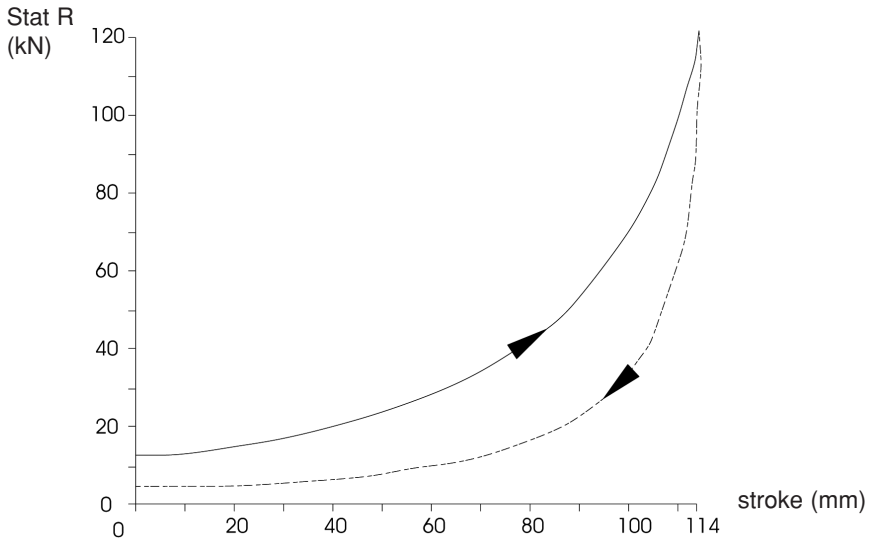

Characteristics

Stroke	114 mm
Dynamic capacity	91 kJ
Max. impact force	1000 kN
Static resistance	from 12 to 125 kN

PLUNGER ASSEMBLY	Codes
Standard plate and standard seals	**M**
Standard plate and high temperature seals	**H**
Marine plate and standard seals	**D**
Marine plate and high temperature seals	**N**
CYLINDER ASSEMBLY	
Back mounted, not built in	**B**
Front mounted, built in	**F**

HEAD & BELLOWS ASSEMBLY	Codes
Buffer head only	**Z**
Buffer head with bellows	**N**
HEADS	
standard : dia.	**140 mm**
special : dia.	**280 or 330 mm**

METERING PINS

Mass per buffer			
from 1 to 4 T	**02**	from 21 to 43,5 T	**07**
from 2,5 to 7,5 T	**03**	from 40 to 80 T	**08**
from 4 to 10 T	**04**	from 50 to 100 T	**09**
from 10 to 20 T	**05**	from 62,5 to 125 T	**10**
from 13 to 28 T	**06**	from 90 to 225 T	**11**

In grey shade : special metering pins. For higher mass, please consult us.

Identification

Ex :		assemblies			
type	plunger	cylinder	head and bellows	head diameter	metering pin N°
4	**- M**	**B**	**Z**	**-140**	**-05**

HYDRAULIC BUFFER

TYPE 4

Dimensions

Cylinder assembly F

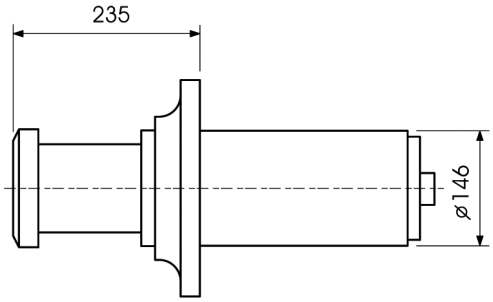

Cylinder assembly B

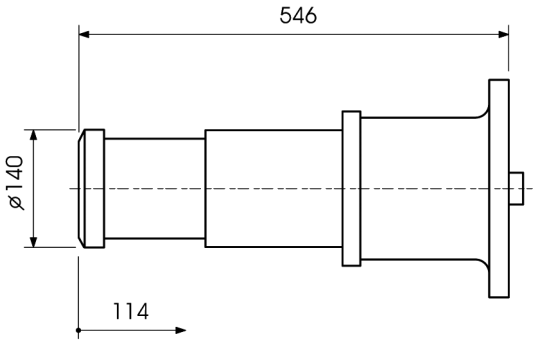

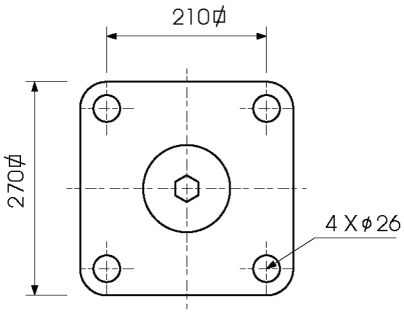

Weight	
F	B
kg	kg
51	**65**

We reserve the right to discontinue or change specifications or design at any time without prior notice and whithout incurring any obligation whatsoever.

GANTREX S.A.

rue du Commerce 19 • 1400 Nivelles • Belgium
Tel. : +32(0)67.88.80.30 • Fax : +32(0)67.21.63.21 • E-mail : info@be.gantry.com
http://www.gantry.com